Sommer-automatic
Grippers
Separators
Swivel units
Rotating jaws
Axial compensators
Tool changers
Linear cylinders
Shock absorbers
Rotary cylinders
Air vane motors
Vacuum components
Accessories
Quick finder

Low-cost angular gripper

Advantages, benefits, comparisons and tips!
Stacks of information all about this product are on page 154.1

Gripping force as a function of opening angle

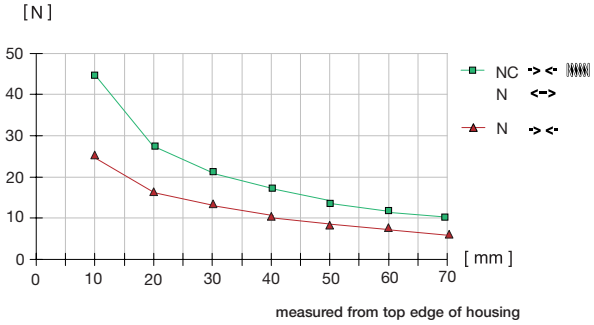

measured from top edge of housing

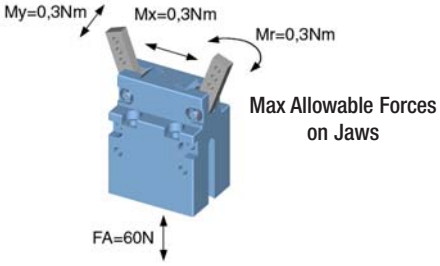

Max Allowable Forces on Jaws

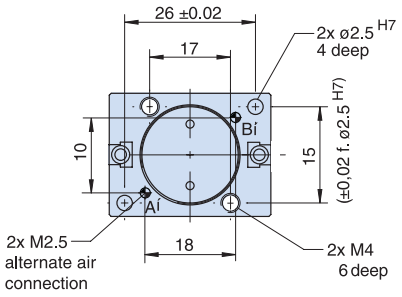

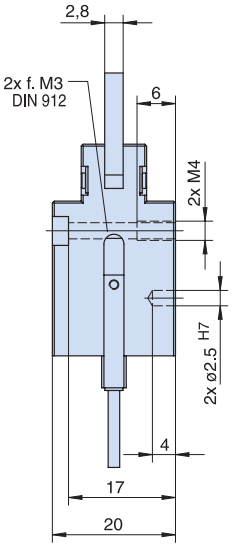

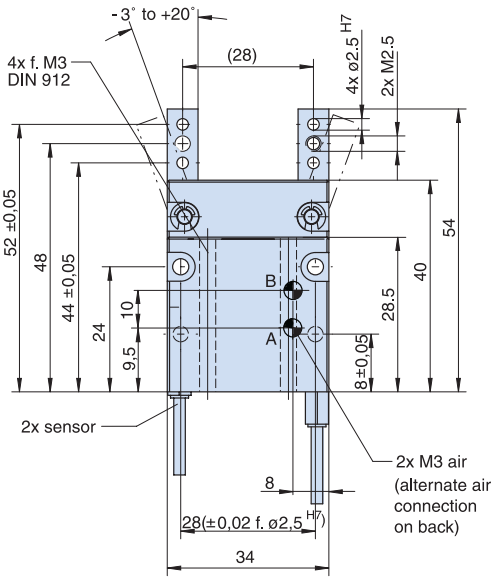

Order no.:						
SGW14 N	**SGW14 NC**					
Drive:						
pneum.	pneum.					
Stroke per jaw [°]:						
-3 /+20	-3 /+20					
Gripping torque in closing [Nm]:						
0,5	0,8					
Gripping torque in opening [Nm]:						
0,8	-					
Self-locking via:						
DSV1/8	Spring					
Closing time/opening time [s]:						
0,01	0,02					
Repeatability ± [mm]:						
0,1	0,1					
Min./max. operating pressure [bar]:						
3/8	5/8					
Air volume per cycle [cm³]:						
1,8	1,8					
Min./max. operating temperature. [°C]:						
5/80	5/80					
Temp. resistant version up to 150°C [add to part number]:						
T	T					
Piston diameter [mm]:						
14	14					
Weight [kg]:						
0,07	0,08					

All data measured at 6 bar.

See Page 154.1 for Accessory list.